CITY of CRYSTAL

4141 Douglas Drive North • Crystal, Minnesota 55422-1696

Tel: (763) 531-1000 • Fax: (763) 531-1188 • www.crystalmn.gov

REQUEST FOR PROPOSALS ("RFP")

5548 Yates Avenue North
Lot Price $50,000

The Economic Development Authority of the City of Crystal ("the EDA") is requesting proposals from builders to purchase 5548 Yates Avenue North for construction of a new single family house. Enclosed please find the Proposal Form and Guidelines for making a proposal.

To receive consideration, proposals must be submitted on a completed Proposal Form plus the required attachments and additional information. Incomplete proposals will not be considered. Proposals may be submitted at any time; the first qualifying proposal we receive will be presented to the EDA board, unless the lot has been optioned by another builder.

If you have questions about the RFP process or the enclosed Guidelines, feel free to contact me at 763.531.1142 or john.sutter@crystalmn.gov. Thank you for your interest.

Regards,

John Sutter
City Planner/Assistant Community Development Director

PROPOSAL FORM
PROPOSAL TO THE ECONOMIC DEVELOPMENT AUTHORITY OF THE CITY OF CRYSTAL
5548 YATES AVENUE NORTH

CHECK ONE:

___ **BUILDER OFFERS $50,000 TO PURCHASE THIS LOT**

___ **BUILDER OFFERS $500 FOR A SIX-MONTH OPTION TO PURCHASE THIS LOT FOR $50,000**

This proposal is not a purchase agreement or other binding contract. At this time, the Builder is submitting a proposal to purchase this lot and build a new single family house in accordance with the RFP Guidelines, or is requesting a six-month option for same.

If a builder's proposal is tentatively accepted by the EDA board, then EDA staff would work with the Builder to determine the specific house plan and present it at the next EDA meeting. If the EDA board gives final approval at that time, the Builder would sign a Purchase & Redevelopment Agreement and provide $2,000 earnest money for the lot. Only after such an Agreement is signed would a binding contract exist between the EDA and the Builder.

Builders may purchase a 6-month option on a lot for $500, renewable for an additional 6 months for an additional $500. The option provides the builder with exclusive rights to purchase the lot and build a house subject to the normal EDA process, requirements and guidelines. As a condition of the option, the builder must list the lot with a to-be-built house on the MLS for the duration of the option. The number of options is limited: No builder may have options on more than 10% of the EDA's lots, and no more than 50% of the EDA's lots may be under option at any time.

BUILDER: *(Builder is required to be a Residential Building Contractor licensed by the State of Minnesota.)*

Name: _____ State License Number: _____

Tel (1): _____ Tel (2): _____ Fax: _____

Address: _____ City/State/Zip: _____

Email: _____ _____ _____
Signature Date

REQUIRED ATTACHMENTS AND ADDITIONAL INFORMATION:

- ☐ Attach one representative example of a house you would plan to build on this lot if your proposal is selected. It does not need to show exactly how it would be placed on the lot; it just needs to show the approximate size, quality and features you would anticipate a new house would have on this lot. A specific house plan would be determined after a proposal is tentatively accepted by the EDA.
- ☐ The EDA will only sell lots to builders who have experience in house construction in Minnesota. Please list the addresses of three houses you have built in Minnesota within the last five years, or attach other evidence of qualification for review by the EDA:

House #1: _____

House #2: _____

House #3: _____

SUBMIT PROPOSAL TO: **Attn: John Sutter, Crystal EDA, 4141 Douglas Dr N, Crystal MN 55422**

TEL: 763.531.1142 FAX: 763.531.1188 john.sutter@crystalmn.gov

***PROPOSALS MAY BE SUBMITTED BY HAND DELIVERY, U.S. MAIL, FAX, OR EMAIL* (.pdf format).**
PROPOSALS MAY BE SUBMITTED AT ANY TIME AND WILL BE CONSIDERED ON A "FIRST COME, FIRST SERVED" BASIS UNLESS THE LOT HAS BEEN OPTIONED BY ANOTHER BUILDER.

RFP GUIDELINES FOR 5548 YATES AVENUE NORTH

A. Legal Description. The property is legally described as: That part of Lot 4, Block 3, Boulevard Acres, Hennepin County, Minnesota lying North of the South 65 feet thereof.

B. Anticipated Timeline for Lot Sales.
After a builder submits a qualifying proposal, the timeline would be as follows:

- EDA meeting #1: EDA rejects or tentatively accepts Builder's proposal. If accepted, Builder prepares detailed house plans for EDA public hearing.
- EDA meeting #2 (approximately one month after #1): EDA holds public hearing and considers a resolution authorizing the lot sale.
- 10 days after EDA meeting #2: Deadline for Builder to sign the Purchase & Redevelopment Agreement and pay $2,000 nonrefundable earnest money.
- 2 months after EDA meeting #2: Deadline for Builder to close on the lot purchase.

C. Deadline for Completion. Construction of the new house must be completed within one year of EDA meeting #2 (see above).

D. Specifications.

1. Grading and Drainage.

a) The lot is essentially level. The estimated top of foundation for the new house would be 871 feet. The elevation would be refined by Builder and EDA staff during the development of the specific house plan prior to final EDA approval of the lot sale. Upon completion of the final grade but prior to installing landscaping, Builder shall submit an as-built survey to the Building Official showing the final grade elevations, unless EDA staff determines that it is not necessary.

b) Drainage from the house, garage, driveway and any other structures shall be accommodated on the site so that water flow onto adjacent properties is minimized. Builder's final grade shall carry water primarily to the street. If determined by the Building Official to be necessary, Builder will install rain gutters to direct roof runoff to minimize impacts on adjacent properties. Builder will restore any disturbed turf or landscaping.

c) Builder will follow Best Management Practices to minimize erosion and runoff onto adjacent properties and public ways. At a minimum, Builder will install silt fencing or wattle logs to prevent runoff silt from flowing onto the street or adjacent properties.

2. Utilities.

a) Utility meters shall be reasonably screened from street view; locations must be specified on the plans submitted with the building permit application.

b) All utility service lines shall be underground. Utilities may locate necessary facilities such as pedestals or boxes in the street right-of-way or utility & drainage easements.

c) Any expenses for connection of the house to utilities shall be the responsibility of Builder, including any necessary landscaping or sidewalk, curb or pavement work, but excepting reasonable costs associated with sewer stub replacement discussed in e) below.

d) Municipal Water. Municipal water is available at the lot line along Yates using an existing service stub. There are no WAC charges.

e) Municipal Sanitary Sewer. Municipal sanitary sewer is available at the curb along Yates using an existing service stub.

Upon exposure of the end of the sewer stub, Builder or its agents shall call the city's Utilities staff (763.531.1166) and have the stub and wye inspected before doing further work. If in poor condition, the city may require Builder to replace the stub to the wye. If such work is required, then EDA shall reimburse Builder for reasonable costs related to such work (submit quote from your subcontractor for EDA staff approval before proceeding). EDA will also repair street after completion or reimburse builder for costs of same (again, submit quote from your subcontractor for EDA staff approval before proceeding).

There are no SAC charges levied by Metropolitan Council Environmental Services.

f) Private Utilities, including natural gas (Centerpoint Energy), electricity (Xcel Energy), telephone (Qwest), and cable television (Comcast). The house shall access private utilities via underground connections only. Centerpoint is located in the street right-of-way. Xcel, Qwest and Comcast are located on a pole in the utility easement near the northeast corner of the lot.

g) Questions regarding city utilities should be directed to Engineering Project Manager Mick Cyert (763.531.1161 or mick.cyert@crystalmn.gov). Questions regarding private utilities should be directed to the respective utility company.

3. **Driveways and Curb Cuts.** A hard surfaced driveway is required to provide access from the street to the new house's garage. The curb cut and driveway approach in the boulevard area shall not to exceed 22 feet wide. Once out of the street right-of-way, the driveway may exceed 22 feet in width provided it does not exceed the width of the overhead garage doors plus six feet. The house's building permit application must include a site plan showing the proposed driveway layout.

4. **General Construction Practices.** The construction site, neighboring property and adjacent public streets shall be kept free of construction debris at all times, and Builder must have a construction dumpster to prevent debris from being scattered or blown around. No construction workers, construction equipment or construction material shall enter neighboring properties without said property owner's consent.

5. **Building Standards.**

a) Compliance with Crystal City Code.

b) Minimum required setbacks for the house are as follows: 30 feet from the front lot line, 30 feet from the rear lot line; and 5 feet from the side lot lines. City code does have some limited exceptions to the front and rear setbacks; those can be discussed in detail with EDA staff if your proposal is accepted.

c) The house shall have at least three bedrooms and two bathrooms.

d) The house shall have a full depth basement, unless the selected design results in a split level / garden level type of basement. At a minimum, basements shall have at least one egress window and a rough-in for a future ¾ bath. Additional basement windows are desirable. Slab houses and crawlspace houses will not be considered by the EDA.

e) Exterior materials (siding, soffit, doors and windows) shall be low maintenance. The use of brick or stucco is encouraged. Fiber cement siding or wood siding with natural resistance to decay are encouraged but they must be properly stained or painted. Vinyl or other low maintenance siding materials are generally acceptable and can be made more desirable through the use of shakes, fish scales or other styles to break up the pattern. Hardboard panels or hardboard lap siding are not acceptable.

f) The house shall have an attached garage for at least two cars.

g) The design should emphasize the front door as the focal point for the front of the house. A large and usable (minimum depth 6 feet) front porch is desired. Garage door dominance in design should be minimized as much as possible, such as by using separate doors for each stall.

h) Plans should present a balanced and pleasing distribution of wall and window areas from all views. Blank walls are not permitted; each wall shall have some windows. Corner rooms should have windows on both walls, if possible. To the extent that southern exposures are present, house designs are expected to enhance wintertime natural light and passive solar heating.

i) The new house shall be built with a passive venting system for radon gas reduction.

j) The new house shall have Carbon Monoxide alarms in accordance with M.S. 299F.50.

k) No equipment such as air-conditioning cooling structures or condensers that generate noise shall be located within a side setback, drainage & utility easement, or 10 feet of living quarters located in a building on adjacent property.

6. **Landscaping.** The lot shall be landscaped to be aesthetically pleasing in all seasons. Land forms and plant materials shall be used to define the site and blend neatly with adjoining property.

In the front yard, Builder shall plant at least two large-species deciduous shades trees.

In the rear yard, Builder may choose to preserve or remove the 34 inch and 26 inch Maple trees in the rear yard:

- If they are going to be preserved, then tree protection fencing shall be installed and maintained at a minimum distance of 20 feet from the trunks. There shall be no disturbance of the fenced area, such as stockpiling construction equipment, materials, fill or dirt. If any disturbance occurs, then Builder shall pay to the EDA an amount equivalent to three year's worth of Cambistat treatments for each tree, up to a maximum of $1,800. Such payment would be required before the EDA releases its Certificate of Completion that allows Builder to sell the new house.
- If either of these Maples are removed, then for each that is removed, Builder shall plant a large-species deciduous shade tree in the rear yard.

Planting of the following trees is PROHIBITED:

- *Acer ginnala*	Amur maple
- *Acer negundo*	boxelder
- Acer *platnoides*	Norway maple
- *A. saccharum*	sugar maple
- *A. sacharinum*	silver maple
- *A. rubrum*	red maple
- *A. truncatum x platnoides*	hybrid maples eg.'Aut.Blaze', 'Warrensed', etc.
- *Fraxinus spp.*	ash
- *Morus spp.*	mulberries
- *Rhaqmnus spp.*	buckthorns
- *Populus spp.*	poplars, cottonwoods, aspens
- *Robinia pseudoacacia*	black locust
- *Salix spp.*	willows
- *Tilia cordata*	little-leaf linden

Planting of the following trees is RECOMMENDED:

- *Aesculus spp.*	Horsechestnuts, Ohio buckeyes
- *Amelanchier arborea,* hybrids	Downy serviceberry, 'Autumn Brilliance,' etc.
- *Betula nigra*	river birch
- *Carpinus caroliniana*	blue beech or musclewood
- *Celtis occidentalis*	common hackberry
- *Cercis Canadensis* 'Northern Strain'	'Northern Strain' redbud

- *Cladrastus kentukea*	yellowwood
- *Ginkgo biloba*, male cultivars	ginkgo cultivars
- *Gleditsia triacanthos inermis*	thornless honeylocust
- *Gymncladus dioecus*	Kentucky coffeetree
- *Ostrya virginiana*	ironwood
- *Quercus alba*	white oak
- *Q. bicolor*	swamp white oak
- *Q. macrocarpa*	bur oak
- *Q. rubrum*	red oak
- *Syringa reticulate*	tree lilac
- *Ulmus Americana* dis.resist vars.	American elms, disease resistant
- *Ulmus hybrids*	hybrid elms, disease resistant

Species, size and specific location of all new trees must be approved by City Forester James Burks (763.531.1162 or james.burks@crystalmn.gov). Builder must submit a planting plan to the City Forester for review and approval PRIOR TO PLANTING.

If Builder desires to close on the sale of the new house prior to completion and acceptance of the landscaping, the EDA may require that funds be escrowed by the Builder to guarantee that landscaping is completed in a timely manner after closing.

7. **Land Use and Property Tax Status.** The new house shall be a single-family, owner occupied house, and may not subsequently be taken off the property tax rolls.

E. **Builder Selection Criteria.** Builders must meet the following requirements:

1. Licensed as a Residential Building Contractor by the State of Minnesota. Proposals submitted by parties not licensed as a Residential Building Contractor will not be considered by the EDA.

2. Have experience in house construction in Minnesota. Builders shall provide the addresses of three houses they have built in Minnesota within the last five years, or other evidence of qualification acceptable to the EDA.

3. Provide proof of Builder's risk, comprehensive general liability, and worker's compensation insurance coverage, if requested by EDA staff.

4. Provide references from previous customers, suppliers and inspectors, if requested by EDA staff.

5. Be capable of closing on the lot purchase within two months of the EDA approving the lot sale (EDA meeting #2).

6. Be capable of completing the house within one year of the EDA approving the lot sale (EDA meeting #2).

F. **Procedure for Consideration of Builder Proposals.**

1. Builder proposals may be submitted at any time, and will be considered on a "first come, first served" basis. The EDA will only consider one proposal at a time.

2. EDA staff will review the proposal and present it to the EDA board at its next meeting.

3. At that meeting (EDA meeting #1), the EDA board will either reject or tentatively accept the proposal. If the proposal is accepted, then EDA staff will work with the builder to prepare detailed house plans for the lot. The EDA has total discretion regarding whether to reject or accept a proposal.

4. At its next meeting (EDA meeting #2), the EDA board will hold a public hearing and consider a resolution authorizing the sale of the property to the Builder for construction of the house shown in the detailed plans.

5. No later than 10 days after EDA meeting #2, the Builder must sign the Purchase and Redevelopment Agreement and pay $2,000 nonrefundable earnest money.

6. No later than 2 months after EDA meeting #2, the Builder must close on the sale of the lot. At closing, the Builder shall make full payment for the remainder of the lot price (the EDA does not provide interim financing). To save time, Builder may begin the building permit application process before the closing date. However, the permit will not be issued until Builder has closed on the lot.

7. No later than one year after EDA meeting #2, the Builder must complete the house.

G. Building Permit Application Process.

When applying for a building permit to construct the new house, Builder will need to provide a complete building permit application, including the following items:

- ☐ Plans (2 copies).
- ☐ Land Survey (2 copies) with building elevations, drainage patterns and easements.
- ☐ Energy Calculations.

Questions regarding building permit forms, fees, inspections, etc. should be directed to the Administration counter (763.531.1000). The Building Official and EDA staff will review all plans to assure conformance with Builder's proposal, these Guidelines and the house plan approved by the EDA. If any element of the plan is in conflict with the above criteria, EDA staff will notify Builder of any conflicts and note which changes are required. Unless the modifications can be clearly indicated on the originally submitted plans, Builder shall submit revised plans for final approval by the Building Official and EDA staff.

H. List of Attachments:

- 2009 aerial photo showing location of subject property
- Water tie card
- Sanitary sewer tie card
- Survey annotated with setback lines (May not be to scale due to reduction from 11"x17" to 8½"x11" paper. Hard copy of survey available upon request.)

N

56TH AVE N
ZANE AVE N
YATES AVE N
XENIA AVE N
ZANE PL N

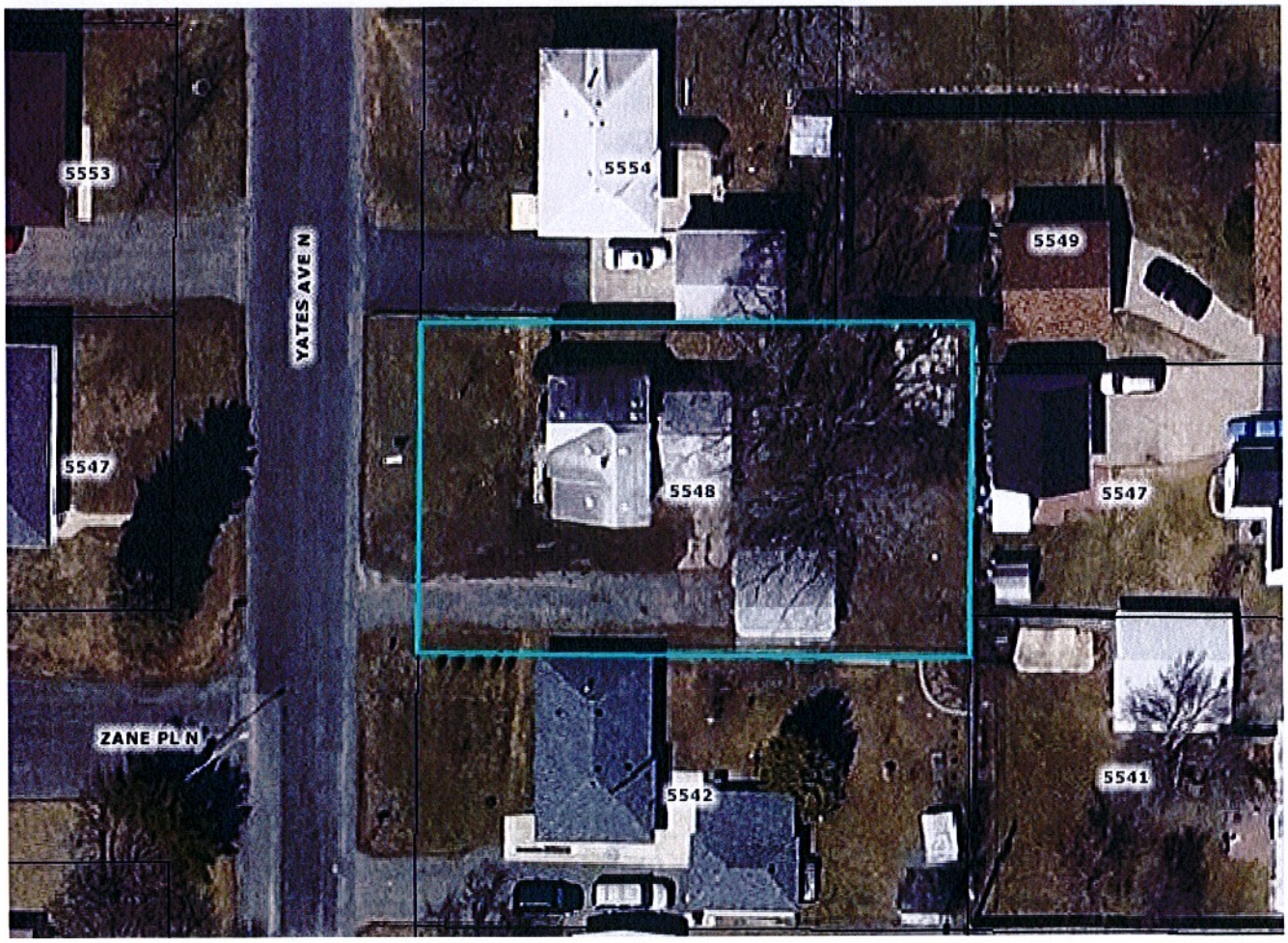
5553
5554
5549
YATES AVE N
5547
5548
5547
ZANE PL N
5542
5541

WATER SERVICE RECORD

FILE NO. 19-870

Address 5548 Yates

Lot Part 4 Block 3 Plat BOULEVARD ACRES

MAIN: Location YATES (Street) Size 6" Kind _____ Depth _____ Soil _____

TAP: Size 1" Thread Type AWWA

CORP: Size 1" 1/8 Bend YES (Yes-No) Conn. C (Copper-Lead-Wipe) Make Mueller Cat. No. H-15010

SERVICE PIPE: (Corp to Curb Stop) Size 1" Kind C Depth _____ Length _____

CURB STOP: Size 1" Conn. 1"C (In) 1"C (Out) Make Mueller Cat. No. H-15151

Minn. Thd. YES (Yes-No) Invert. Key NO (Yes-No) Waste NO (Yes-No)

CURB BOX: Make Mueller Size 1 1/4" Adjust. SLIP (Slip-Screw-No) Extension Rod NO (Yes-No)

SERVICE PIPE: (Curb Stop to Bldg.) Size 1" Kind C Depth _____ Length _____

TAP LOCATION:

CURB BOX LOCATION:

Tapped By _____ (Plumber) Date 12/7/65 Permit No. 2214

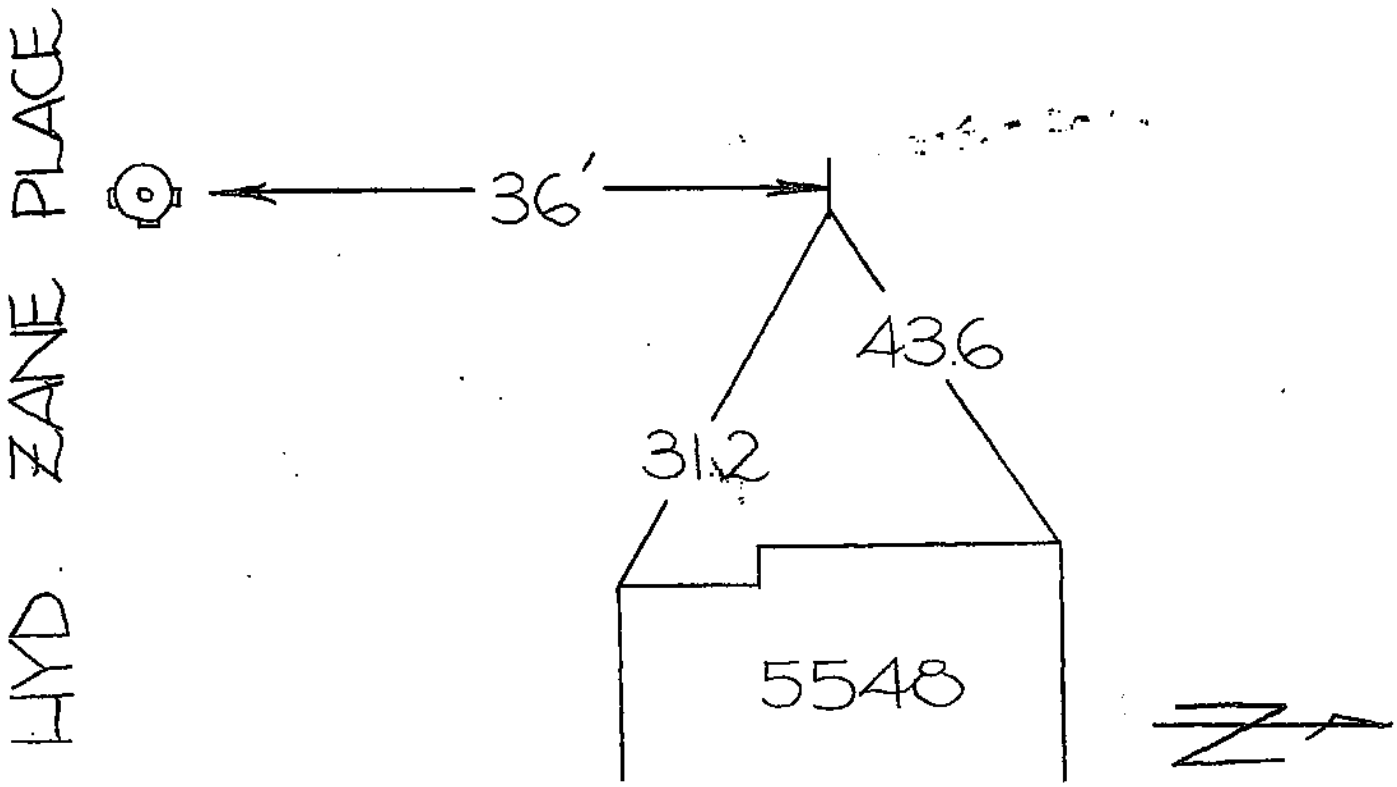

SANITARY SEWER SERVICE RECORD

5-92

Address: 5548 Yates Ave. No.

Legal: N½ of W½ Lot 4 BLK 3, Boulevard Acres

Permit No. 2612 Plumber Sacks Date Completed 11-18-57

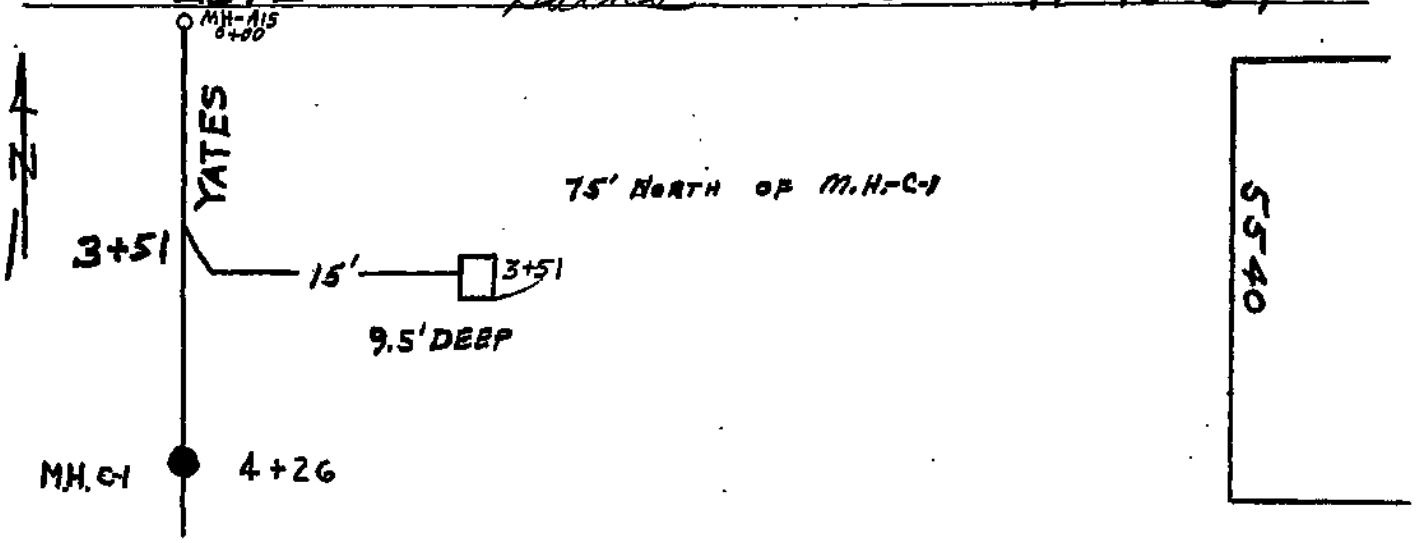

Remarks:

-- Established in 1962

LOT SURVEYS COMPANY, INC.

LAND SURVEYORS

REGISTERED UNDER THE LAWS OF STATE OF MINNESOTA

7801 73rd Avenue North

(763) 560-3093

Fax No. 560-3622

Minneapolis, Minnesota 55428

INVOICE NO. 78060

F.B.NO. 1010-44

o Denotes Iron Monument

● Denotes Iron Monument Found

x000.0 Denotes Existing Elevation

Basis of bearings is assumed.

Surveyors Certificate

EXISTING CONDITIONS SURVEY FOR

CITY OF CRYSTAL

Property located in Section 4, Township 118, Range 21, Hennepin County, Minnesota.

Property Address: 5548 Yates Avenue N., Crystal, MN

Benchmark: Top Nut of Hydrant at 57th Avenue N. & Yates Ave. N
Elevation = 868.18 N.G.V.D. 1929 adj.

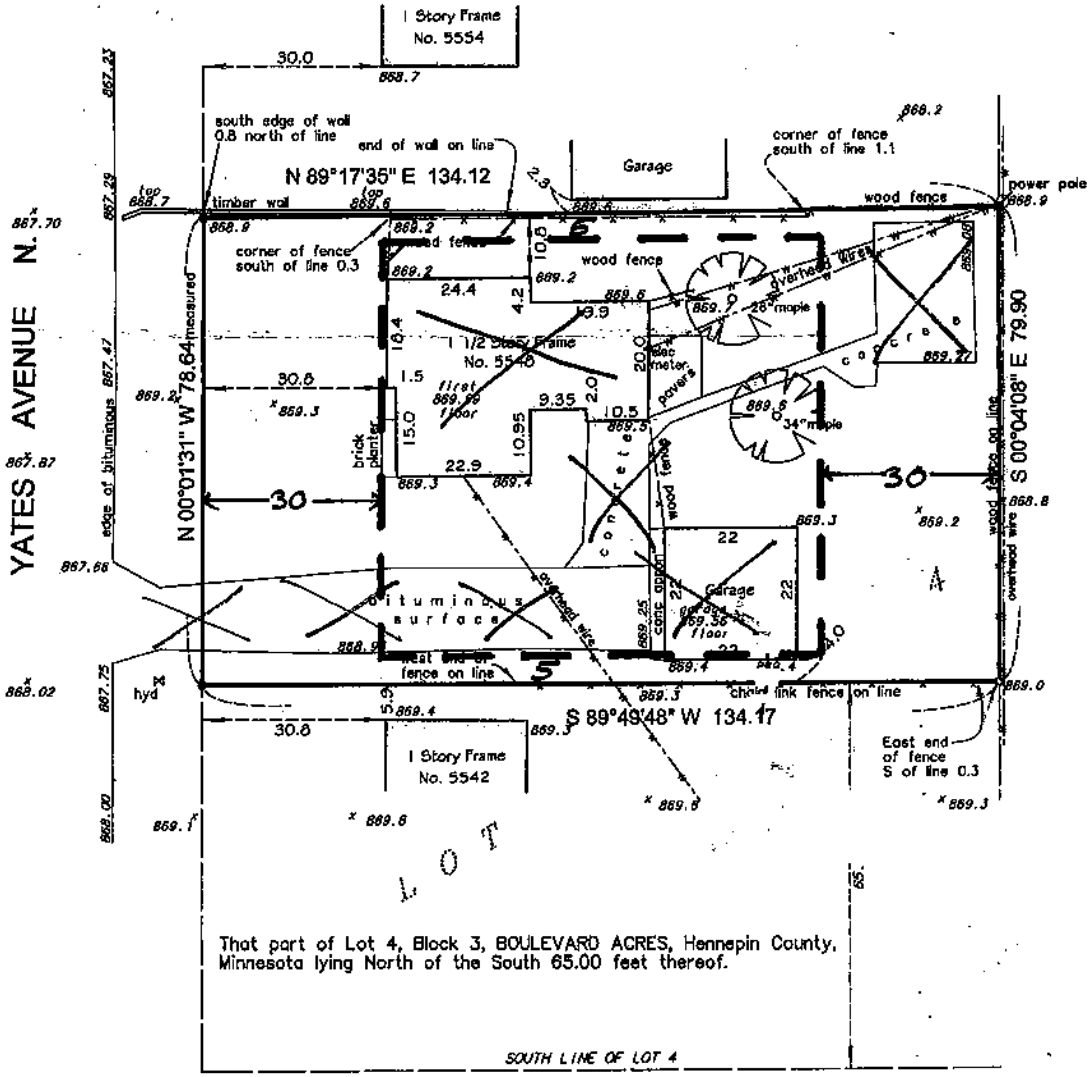

That part of Lot 4, Block 3, BOULEVARD ACRES, Hennepin County, Minnesota lying North of the South 65.00 feet thereof.

The only easements shown are from plats of record or information provided by client.

We hereby certify that this is a true and correct representation of a survey of the boundaries of the above described land and the location of all buildings and visible encroachments, if any, from or on said land.

Surveyed by us this 14th day of July 2009.

Signed

Gregory R. Prasch, Minn Reg No. 24992

cert/subdivisions/Boulevard Acres/Bd4-3inv78060.sc